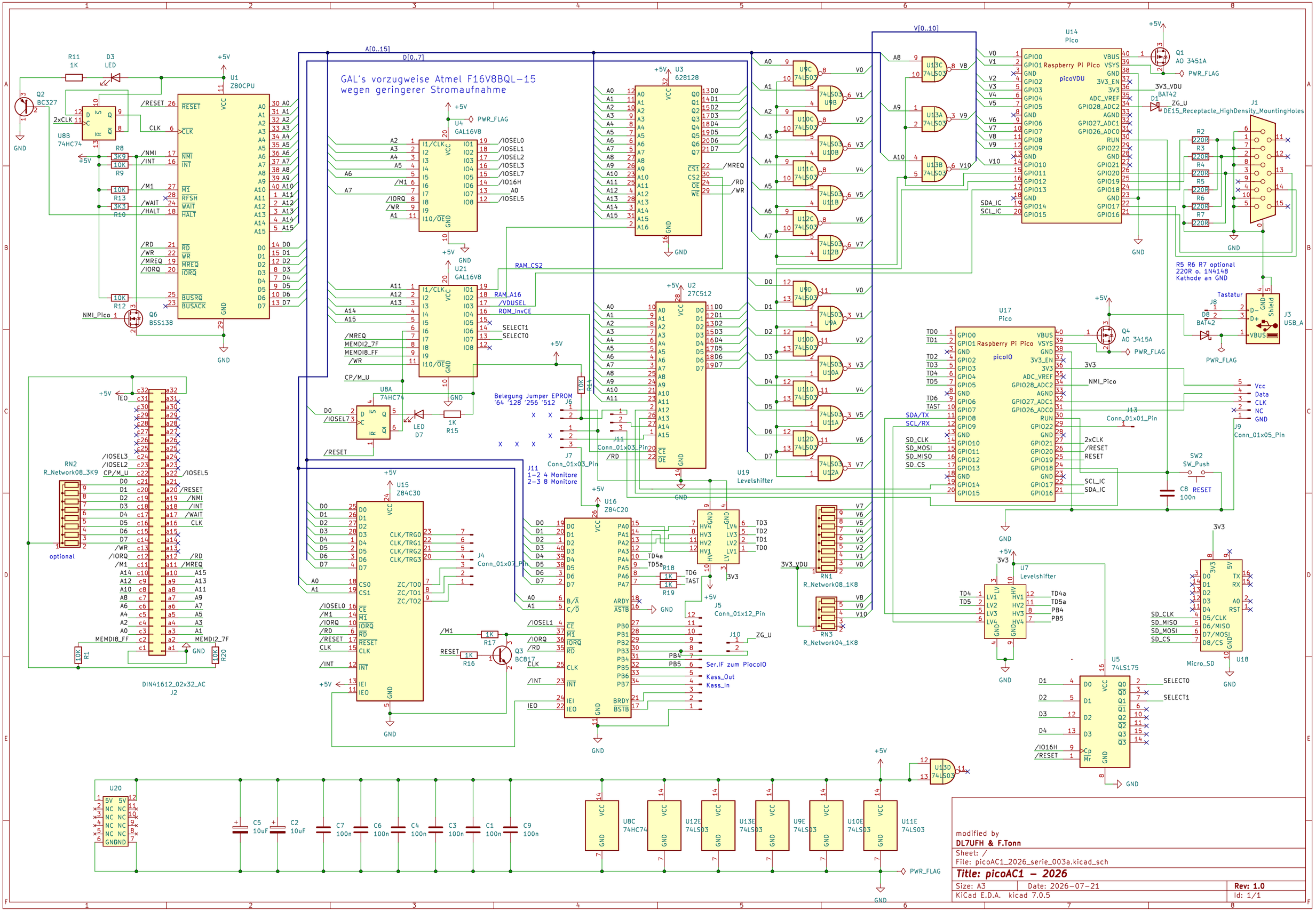
GAL's vorzugweise Atmel F16V8BQL-15
wegen geringerer Stromaufnahme
U1 Z80CPU
U8B 74HC74
U4 GAL16V8
U21 GAL16V8
U3 628128
U2 27C512
U8A 74HC74
U15 Z84C30
U16 Z84C20
U14 Pico
picoVDU
U17 Pico
picoIO
U19 Levelshifter
U7 Levelshifter
U5 74LS175
U18 Micro_SD
J3 USB_A
J1 DE15_Receptacle_HighDensity_MountingHoles
J2 DIN41612_02x32_AC
J4 Conn_01x07_Pin
J5 Conn_01x12_Pin
J7 Conn_01x03_Pin
J9 Conn_01x05_Pin
J11 Conn_01x03_Pin
J13 Conn_01x01_Pin
RN1 R_Network08_1K8
RN2 R_Network08_3K9
RN3 R_Network04_1K8
Q1 AO 3451A
Q4 AO 3415A
Q2 BC327
Q6 BSS138
Q3 BC817
D1 ZG_U
D3 LED
D7 LED
D8 BAT42
Tastatur
SW2 SW_Push
C8 RESET 100n
R5 R6 R7 optional 220R o. 1N4148 Kathode an GND
Belegung Jumper EPROM '64 '128 '256 '512
J11 1-2 4 Monitore 2-3 8 Monitore
Ser.IF zum PicoIO
Kass_Out
Kass_In
optional
U20
C5 10uF
C2 10uF
C7 100n
C6 100n
C4 100n
C3 100n
C1 100n
C9 100n
U8C 74HC74
U12E 74LS03
U13E 74LS03
U9E 74LS03
U10E 74LS03
U11E 74LS03
U13D 74LS03
PWR_FLAG
modified by
DL7UFH & F.Tonn
Sheet: /
File: picoAC1_2026_serie_003a.kicad_sch
Title: picoAC1 – 2026
Size: A3
Date: 2026-07-21
Rev: 1.0
KiCad E.D.A. kicad 7.0.5
Id: 1/1